Centrifugal Belt-Drive In-Line Duct Blower



Designed for indoor clean air applications including intake, exhaust, return, or make-up air systems in industrial or commercial buildings. Rugged construction allows fan to be installed in ductwork either horizontally or vertically. Duct collars provide easy duct connections. Access panels are included on each side of the unit.

- Aluminum backward inclined, nonoverloading centrifugal wheel design
- UL/cUL 705 Listed for Power Ventilators
- Maximum inlet air temperature: 160º F
- Bearing and motor cover provide longer service life
- Regreaseable pillow block bearings

AMCA Sound & Air

Dayton Electric Mfg. Co. certifies that the blowers shown herein are licensed to bear the AMCA seal. The ratings shown are based on tests and procedures performed in accordance with AMCA Publication 211 and AMCA Publication 311 and comply with the requirements of the AMCA Certified Ratings Program.

UL/cUL 705

E53236

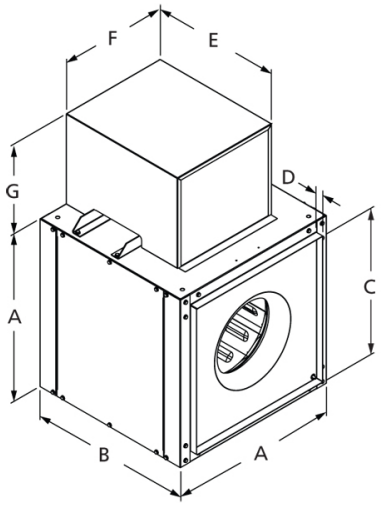

A	B	C	D	E	F	G
26 in	26 in	22 7/8 in	1 in	21 in	17 in	13 3/8 in

Performance Characteristics

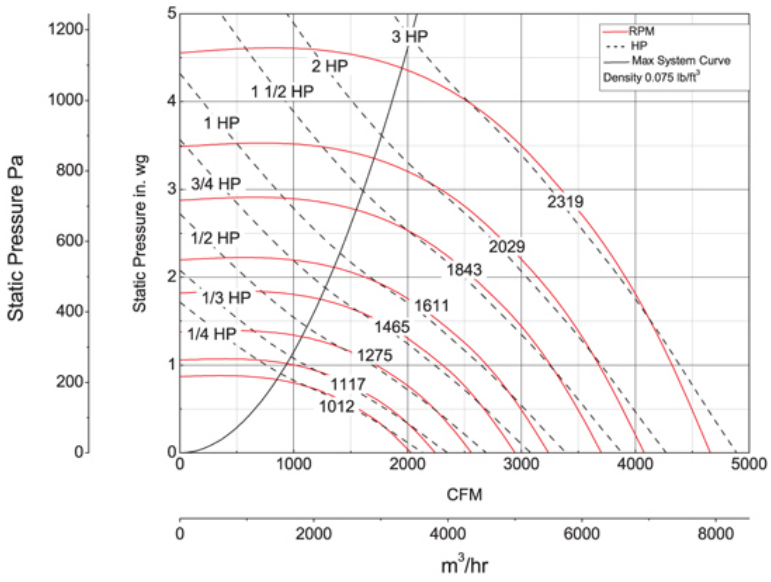

Construction Features

Impeller Diameter (Typ.)	16 in
Impeller Type	Backward Inclined Centrifugal
Impeller Material	Aluminum
Max Inlet Temp	160 °F
Bearing Type	Regreaseable Pillow Block
Drive Package Description	Drives By Others
Warranty Length	1 Year

Air & Sound Performance

Motor HP	Max BHP	Fan RPM	CFM @	0.000" SP	0.125" SP	0.250" SP	0.375" SP	0.500" SP	0.625" SP	0.750" SP	0.875" SP	1.000" SP	1.250" SP	1.500" SP	1.750" SP	2.000" SP	2.250" SP	2.500" SP	2.750" SP	3.000" SP
1/4	0.26	1012	CFM	2033	1938	1834	1713	1563	1377	1117	—	—	—	—	—	—	—	—	—	—
			Sones	8.5	8.3	8.1	7.7	7.4	7.1	6.8	—	—	—	—	—	—	—	—	—	—
1/3	0.35	1117	CFM	2244	2159	2067	1963	1847	1706	1537	1316	—	—	—	—	—	—	—	—	—
			Sones	9.6	9.5	9.3	9.0	8.6	8.3	8.0	7.6	—	—	—	—	—	—	—	—	—
1/2	0.52	1275	CFM	2562	2487	2408	2327	2232	2133	2015	1876	1724	1295	—	—	—	—	—	—	—
			Sones	12.1	11.9	11.6	11.2	10.8	10.3	10.1	9.8	9.6	8.9	—	—	—	—	—	—	—
3/4	0.79	1465	CFM	2944	2879	2812	2741	2671	2588	2504	2410	2307	2059	1734	—	—	—	—	—	—
			Sones	15.5	15.3	15.0	14.6	14.2	13.8	13.4	13.2	13.0	12.8	12.7	—	—	—	—	—	—
1	1.05	1611	CFM	3237	3178	3118	3055	2991	2925	2849	2773	2694	2503	2275	2002	1630	—	—	—	—
			Sones	18.7	18.6	18.5	18.3	17.9	17.4	17.4	17.1	16.7	16.3	16.5	16.7	17.0	—	—	—	—
1 1/2	1.57	1843	CFM	3703	3651	3600	3546	3490	3435	3379	3316	3250	3117	2956	2776	2573	2342	2018	—	—
			Sones	26.0	26.0	26.0	25.0	25.0	25.0	24.0	24.0	24.0	23.0	22.0	23.0	23.0	24.0	25.0	—	—
2	2.10	2029	CFM	4077	4030	3983	3936	3886	3835	3784	3734	3680	3560	3439	3295	3141	2961	2770	2552	2257
			Sones	30.0	30.0	30.0	29.0	28.0	28.0	28.0	26.0	25.0	27.0	26.0	26.0	26.0	26.0	27.0	27.0	28.0
3	3.13	2319	CFM	4660	4618	4577	4536	4495	4451	4407	4362	4318	4229	4125	4019	3913	3785	3655	3506	3345
			Sones	39.0	38.0	37.0	37.0	36.0	35.0	34.0	35.0	33.0	28.0	31.0	31.0	32.0	32.0	33.0	33.0	33.0

Performance certified is for installation type B: Free inlet, Ducted outlet. Power rating (BHP) does not include transmission losses. Performance ratings do not include the effects of appurtenances (accessories). The sound ratings shown are loudness values in fan sones at 5 ft. (1.5 m) in a hemispherical free field calculated per AMCA Standard 301. Values shown are for installation type B: Free inlet hemispherical fan sone levels.