Dayton

Stock No. 1DYK5

Job Name:
Mark:

Submitted By:
Date:11/29/2026

Power Roof Ventilators

Severe-Duty Centrifugal Belt-Drive Upblast Exhaust Ventilator



Designed for heavy grease applications as found in char broilers, solid fuel cooking, and Oriental cooking. Fans are UL 762 listed for all electrical components and grease removal. Units are constructed of heavy gauge steel and utilize a one-piece steel windband that is continuously welded to the curb cap. Clean out port, heat baffle, Nema-1 junction box, and hinged base are included.

- Clean-out port provides easy wheel access
- Heat baffle provides longer motor life
- NEMA 1 junction box located in motor enclosure
- Nonstick coating on wheel
- Polyester gray coating
- Severe wind applications up to 150 mph
- Maximum inlet air temperature: 400º F

AMCA Sound & Air

Dayton Electric Mfg. Co. certifies that the ventilators shown herein are licensed to bear the AMCA seal. The ratings shown are based on tests and procedures performed in accordance with AMCA Publication 211 and AMCA Publication 311 and comply with the requirements of the AMCA Certified Ratings Program.

UL/cUL 762

E53236
MH12596

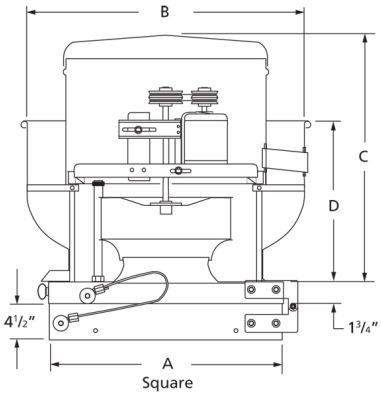

A	B	C	D
25 1/8 in	28 7/8 in	30 in	19 3/8 in

Performance Characteristics

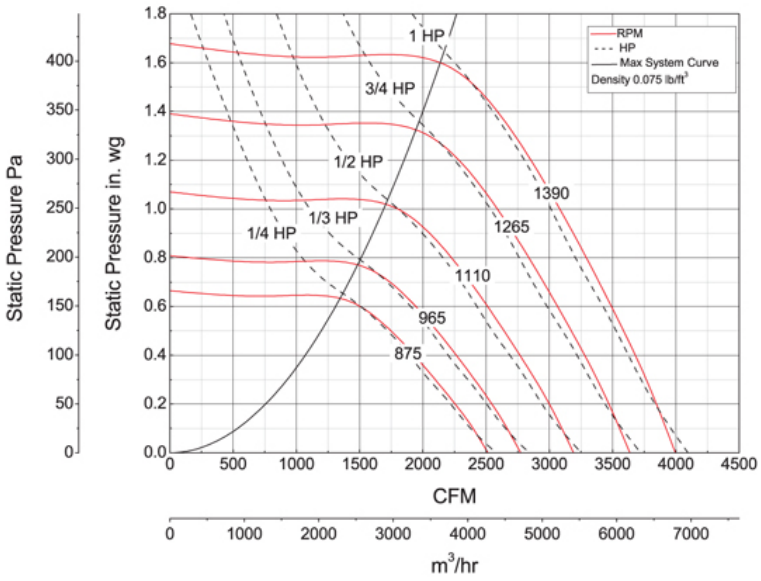

Construction Features

Impeller Diameter (Typ.)	16 1/2 in
Impeller Type	Backward Inclined Centrifugal
Impeller Material	Steel
Max Inlet Temp	400 °F
Bearing Type	Regreaseable Pillow Block
Drive Package Description	Drives By Others
Warranty Length	1 Year

Air & Sound Performance

Motor HP	Max BHP	Fan RPM	CFM @	0.000" SP	0.125" SP	0.250" SP	0.375" SP	0.500" SP	0.625" SP	0.750" SP	0.875" SP	1.000" SP	1.250" SP	1.500" SP
1/4	0.26	875	CFM	2515	2362	2177	1974	1744	1365	—	—	—	—	—
			Sones	11.0	10.6	10.1	9.9	9.7	9.7	—	—	—	—	—
1/3	0.35	965	CFM	2774	2637	2477	2300	2109	1893	1584	—	—	—	—
			Sones	12.4	12.0	11.5	11.2	10.8	10.6	10.5	—	—	—	—
1/2	0.54	1110	CFM	3191	3072	2941	2796	2641	2475	2297	2094	1770	—	—
			Sones	15.0	14.6	14.2	13.8	13.5	13.1	12.9	12.6	12.2	—	—
3/4	0.79	1265	CFM	3636	3532	3426	3301	3172	3036	2894	2746	2583	2163	—
			Sones	18.5	18.1	17.7	17.2	16.8	16.5	16.3	16.1	15.8	15.2	—
1	1.05	1390	CFM	3996	3901	3806	3698	3584	3464	3340	3213	3078	2785	2394
			Sones	22.0	21.0	21.0	20.0	19.9	19.6	19.4	19.2	19.0	18.6	18.0

Performance certified is for installation type A: Free inlet, Free outlet. Power rating (BHP) does not include transmission losses. Performance ratings do not include the effects of appurtenances (accessories). The sound ratings shown are loudness values in fan sones at 5 ft. (1.5 m) in a hemispherical free field calculated per AMCA Standard 301. Values shown are for installation type A: Free inlet hemispherical sone levels.