Silent Low-Profile Ceiling Fan



Low profile, high performance exhaust ventilators designed for residential, commercial, institutional and industrial applications. Factory assembled for side discharge for installation in ceilings. Constructed of galvanized steel and a molded white polystyrene, easy-to-clean grille. Hardware and mounting brackets are included.

- Compact size for height-restricted areas
- Aluminum damper prevents unwanted backdrafts
- Vertical electrical access eliminates drilling holes
- Round standard outlet for quick, easy connections

AMCA Sound & Air

Dayton Electric Mfg. Co. certifies that the fans shown herein are licensed to bear the AMCA seal. The ratings shown are based on tests and procedures performed in accordance with AMCA Publication 211 and AMCA Publication 311 and comply with the requirements of the AMCA Certified Ratings Program.

UL/cUL 507

c UL us LISTED
E19455

CSA Certified Motor

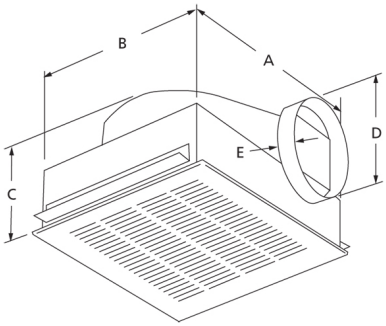

A	B	C	D	E
13 7/8 in	11 1/2 in	7 in	6 in	1 1/4 in

Performance Characteristics

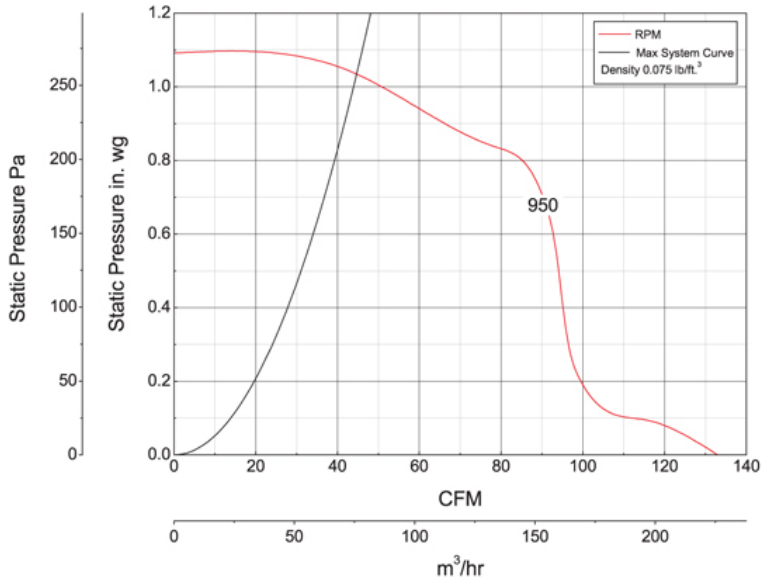

Construction Features

Impeller Type	Forward Curved Centrifugal
Impeller Material	Polypropylene
Max Inlet Temp	104 °F
Warranty Length	1 Year

Motor Information

Motor Item Number	21DX71
Voltage	115
Hertz (Cycle)	60 Hz
Motor Phase	1
Motor Enclosure	Open Drip Proof
RPM	950 rpm
Full Load Amps	1.14

Air & Sound Performance

Motor HP	Max BHP	Fan RPM	CFM @	0.000" SP	0.125" SP	0.250" SP	0.375" SP	0.500" SP	0.625" SP	0.750" SP	0.875" SP	1.000" SP
—	—	950	CFM	133	110	97	95	94	91	85	72	50
			Sones	1.5	1.6	1.7	2.0	2.0	2.9	3.5	3.8	4.4

Performance certified is for installation type B: Free inlet, Ducted outlet. Performance ratings include the effects of an inlet grille and backdraft damper. Speed (RPM) shown is nominal. Performance is based on actual speed of test. The sound ratings shown are loudness values in fan sones at 5 ft. (1.5 m) in a spherical free field calculated per AMCA Standard 301. Values shown are for installation type B: Free inlet spherical sone levels.