Dayton

**Stock No.** 48C180

Job Name:
Mark:

Submitted By:
Date:11/29/2026

**Power Roof Ventilators**

# Variable Speed Electronically Commutated (EC) Ventilator



Designed for use in restaurants, schools, commercial, and industrial applications to exhaust contaminated air from kitchen range hoods, up and away from the roof. Leakproof, spun aluminum construction features a fully rolled windband for increased stability. Energy Saving units feature EC motors which allow up to 80% usable turndown. Motor features potentiometer dial for speed adjustment. Optional Variable-Speed Control Kit (43Y140) can be used to remotely control speed.

- Aluminum backward inclined, nonoverloading centrifugal wheel design
- NEMA 1 junction box located in motor enclosure
- Optional NEMA 1 and 4 disconnects available
- Maximum inlet air temperature: 300º F
- High-efficiency brushless DC motor
- UL/cUL 705 Listed for Power Ventilators
- UL/cUL 762 Listed for Restaurant Exhaust Appliances

GREEN Product
- Variable Speed capable of 80% turn down at a minimum of 85% efficiency at all speeds
- Reduce Energy Consumption

AMCA Sound & Air

Dayton Electric Mfg. Co. certifies that the ventilators shown herein are licensed to bear the AMCA seal. The ratings shown are based on tests and procedures performed in accordance with AMCA Publication 211 and AMCA Publication 311 and comply with the requirements of the AMCA Certified Ratings Program.

UL/cUL 762
c UL us LISTED
E53236
MH12596

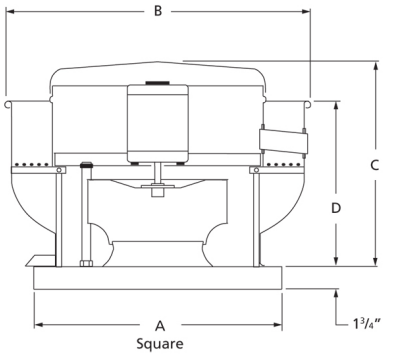


| A | B | C | D |
|---|---|---|---|
| 19 in | 24 7/8 in | 28 1/4 in | 17 3/8 in |

## Performance Characteristics

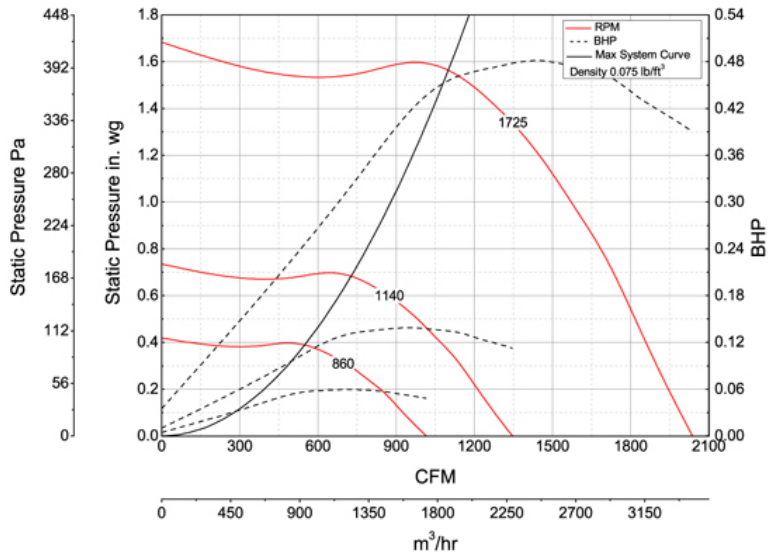


## Construction Features

| | |
|---|---|
| **Impeller Diameter (Typ.)** | 12 1/2 in |
| **Impeller Type** | Backward Inclined Centrifugal |
| **Impeller Material** | Aluminum |
| **Max Inlet Temp** | 300 °F |
| **Warranty Length** | 1 Year |

## Motor Information

| | |
|---|---|
| **Motor Item Number** | 43Y137 |
| **Voltage** | 115 |
| **Hertz (Cycle)** | 60 Hz |
| **Motor Phase** | 1 |
| **Motor Enclosure** | Open |
| **RPM** | rpm |
| **Full Load Amps** | 6.7 |

## Air & Sound Performance

| Motor HP | Max BHP | Fan RPM | CFM @ | 0.000" SP | 0.125" SP | 0.250" SP | 0.375" SP | 0.500" SP | 0.625" SP | 0.750" SP | 0.875" SP | 1.000" SP | 1.250" SP | 1.500" SP |
|---|---|---|---|---|---|---|---|---|---|---|---|---|---|---|
| 1/2 | 0.06 | 860 | CFM | 1015 | 905 | 781 | 581 | — | — | — | — | — | — | — |
| | | | Sones | 5.3 | 5.7 | 5.6 | 5.7 | — | — | — | — | — | — | — |
| 1/2 | 0.14 | 1140 | CFM | 1346 | 1261 | 1180 | 1091 | 981 | 833 | — | — | — | — | — |
| | | | Sones | 7.4 | 7.9 | 8.2 | 8.2 | 8.0 | 8.1 | — | — | — | — | — |
| 1/2 | 0.48 | 1725 | CFM | 2037 | 1979 | 1923 | 1869 | 1816 | 1763 | 1710 | 1642 | 1571 | 1406 | 1176 |
| | | | Sones | 15.6 | 16.1 | 16.7 | 17.3 | 17.9 | 18.2 | 18.4 | 18.7 | 18.7 | 18.6 | 18.4 |

Performance certified is for installation type A: Free inlet, Free outlet. Performance ratings do not include the effects of appurtenances (accessories). The sound ratings shown are loudness values in fan sones at 5 ft. (1.5 m) in a hemispherical free field calculated per AMCA Standard 301. Values shown are for installation type A: Free inlet hemispherical sone levels.