Dayton

Stock No. 4YU91

Job Name:
Mark:

Submitted By:
Date:11/29/2026

Power Roof Ventilators

Axial Belt-Drive Downblast Exhaust Ventilator



Designed for situations that require steady exhaust of clean air under low-to-moderate static pressures. Spun aluminum construction including a fully rolled bead on the windband, ensures stability and provides rigidity for lifting and transporting.

- Maximum inlet air temperature: 120º F
- NEMA 1 junction box located in motor enclosure
- Optional NEMA 1 and 4 disconnects available
- Regreaseable pillow block bearings
- UL/cUL 705 Listed for Power Ventilators
- Air handling quality bearings meet minimum of L10-100,000 hours

AMCA Air

Dayton Electric Mfg. Co. certifies that the ventilators shown herein are licensed to bear the AMCA seal. The ratings shown are based on tests and procedures performed in accordance with AMCA Publication 211 and comply with the requirements of the AMCA Certified Ratings Program.

UL/cUL 705

c UL us LISTED
E53236

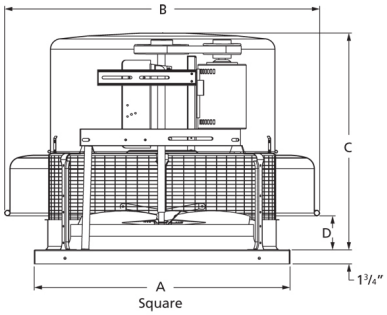

A	B	C	D
46 in	58 5/8 in	41 7/8 in	6 5/8 in

Performance Characteristics

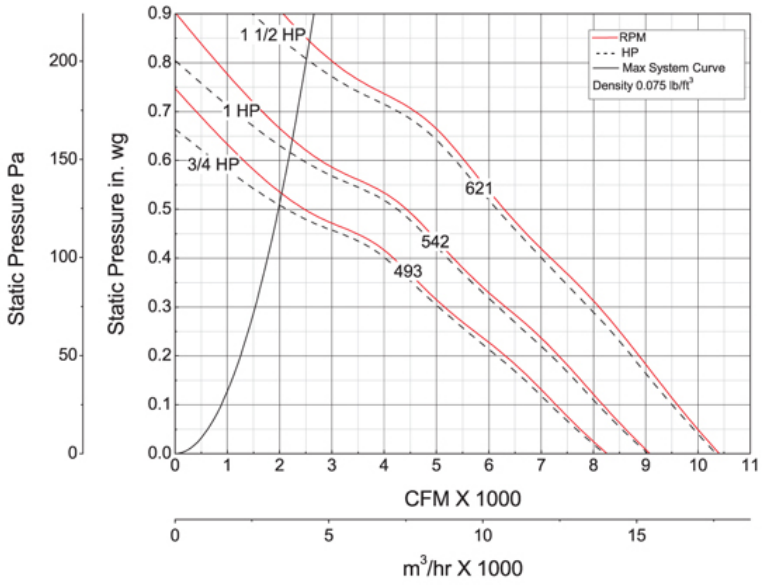

Construction Features

Impeller Diameter (Typ.)	36 in
Impeller Type	Propeller
Impeller Material	Steel
Number of Blades	5
Max Inlet Temp	120 °F
Bearing Type	Regreaseable Pillow Block
Drive Package Description	Drives By Others
Warranty Length	1 Year

Air & Sound Performance

Motor HP	Max BHP	Fan RPM	CFM @	0.000" SP	0.125" SP	0.250" SP	0.375" SP	0.500" SP	0.625" SP	0.750" SP
3/4	0.79	493	CFM	8261	7052	5729	4398	2580	—	—
			Sones	—	—	—	—	—	—	—
1	1.06	542	CFM	9082	7972	6861	5569	4405	2640	—
			Sones	—	—	—	—	—	—	—
1 1/2	1.57	621	CFM	10,406	9425	8502	7424	6316	5299	3733
			Sones	—	—	—	—	—	—	—

Performance certified is for installation type A: Free inlet, Free outlet. Power rating (BHP) does not include transmission losses. Performance ratings include the effects of a birdscreen in the airstream.