Dayton

Stock No. 4YU98

Job Name:
Mark:

Submitted By:
Date:11/29/2026

Power Roof Ventilators

Centrifugal Belt-Drive Downblast Exhaust Ventilator



Designed to meet the general clean air exhaust requirements for industrial and commercial buildings. Features a fully rolled windband bead for increased stability and easy transport. Fresh outside air is drawn in under the motor cover to maximize motor life.

- Aluminum backward inclined, nonoverloading centrifugal wheel design
- Maximum inlet air temperature: 180º F
- NEMA 1 junction box located in motor enclosure
- Optional NEMA 1 and 4 disconnects available
- Regreaseable pillow block bearings
- Air handling quality bearings meet minimum of L10-100,000 hours
- UL/cUL 705 Listed for Power Ventilators

AMCA Sound & Air

Dayton Electric Mfg. Co. certifies that the ventilators shown herein are licensed to bear the AMCA seal. The ratings shown are based on tests and procedures performed in accordance with AMCA Publication 211 and AMCA Publication 311 and comply with the requirements of the AMCA Certified Ratings Program.

UL/cUL 705

c UL us LISTED
E53236

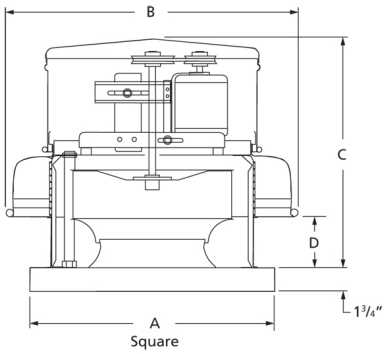

A	B	C	D
30 in	35 1/2 in	34 3/8 in	5 1/2 in

Performance Characteristics

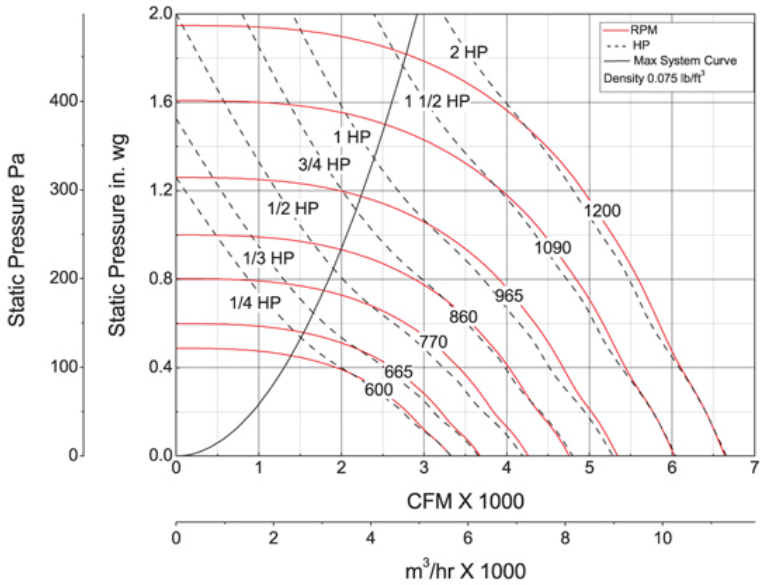

Construction Features

Impeller Diameter (Typ.)	21 1/2 in
Impeller Type	Backward Inclined Centrifugal
Impeller Material	Aluminum
Max Inlet Temp	180 °F
Bearing Type	Regreaseable Pillow Block
Drive Package Description	Drives By Others
Warranty Length	1 Year

Air & Sound Performance

Motor HP	Max BHP	Fan RPM	CFM @	0.000" SP	0.125" SP	0.250" SP	0.375" SP	0.500" SP	0.625" SP	0.750" SP	0.875" SP	1.000" SP	1.250" SP	1.500" SP	1.750" SP
1/4	0.26	600	CFM	3320	2984	2637	2089	—	—	—	—	—	—	—	—
			Sones	8.5	7.9	7.3	6.1	—	—	—	—	—	—	—	—
1/3	0.35	665	CFM	3680	3378	3085	2706	2087	—	—	—	—	—	—	—
			Sones	9.6	9.0	8.5	7.7	6.7	—	—	—	—	—	—	—
1/2	0.55	770	CFM	4261	4013	3744	3477	3141	2643	—	—	—	—	—	—
			Sones	12.1	11.0	10.7	10.2	9.8	9.3	—	—	—	—	—	—
3/4	0.77	860	CFM	4759	4548	4289	4068	3811	3504	3085	2459	—	—	—	—
			Sones	14.1	13.3	12.9	12.4	11.8	11.4	11.1	11.4	—	—	—	—
1	1.09	965	CFM	5340	5158	4927	4720	4520	4285	4015	3689	3240	—	—	—
			Sones	16.7	16.0	15.4	15.0	14.5	14.1	13.7	13.2	13.0	—	—	—
1 1/2	1.56	1090	CFM	6032	5870	5682	5473	5301	5124	4925	4698	4450	3751	—	—
			Sones	20.0	19.6	18.9	18.4	18.1	17.8	17.5	17.2	16.8	15.8	—	—
2	2.09	1200	CFM	6640	6494	6336	6145	5969	5813	5651	5477	5274	4829	4177	3077
			Sones	24.0	23.0	23.0	22.0	22.0	21.0	21.0	21.0	21.0	19.9	18.6	16.7

Performance certified is for installation type A: Free inlet, Free outlet. Power rating (BHP) does not include transmission losses. Performance ratings include the effects of a birdscreen in the airstream. The sound ratings shown are loudness values in fan sones at 5 ft. (1.5 m) in a hemispherical free field calculated per AMCA Standard 301. Values shown are for installation type A: Free inlet hemispherical sone levels.