Dayton

Stock No. 4YU99

Job Name:
Mark:

Submitted By:
Date:11/29/2026

Power Roof Ventilators

Centrifugal Belt-Drive Downblast Exhaust Ventilator



Designed to meet the general clean air exhaust requirements for industrial and commercial buildings. Features a fully rolled windband bead for increased stability and easy transport. Fresh outside air is drawn in under the motor cover to maximize motor life.

- Aluminum backward inclined, nonoverloading centrifugal wheel design
- Maximum inlet air temperature: 180º F
- NEMA 1 junction box located in motor enclosure
- Optional NEMA 1 and 4 disconnects available
- Regreaseable pillow block bearings
- Air handling quality bearings meet minimum of L10-100,000 hours
- UL/cUL 705 Listed for Power Ventilators

AMCA Sound & Air

Dayton Electric Mfg. Co. certifies that the ventilators shown herein are licensed to bear the AMCA seal. The ratings shown are based on tests and procedures performed in accordance with AMCA Publication 211 and AMCA Publication 311 and comply with the requirements of the AMCA Certified Ratings Program.

UL/cUL 705

c UL us LISTED
E53236

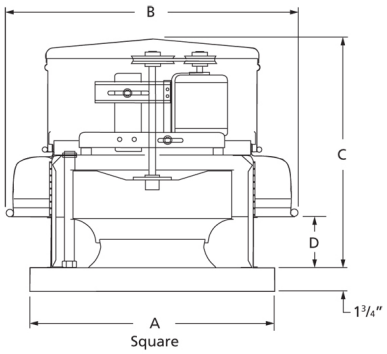

A	B	C	D
34 in	42 3/4 in	38 3/8 in	5 3/4 in

Performance Characteristics

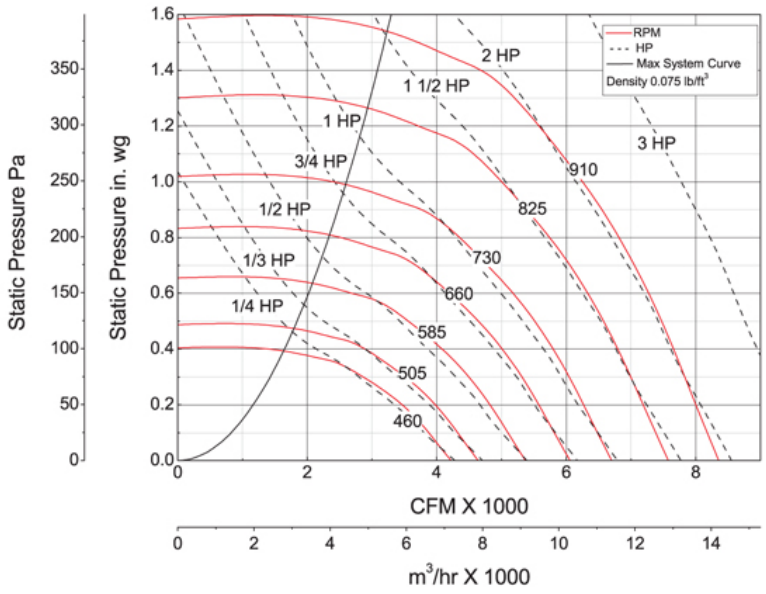

Construction Features

Impeller Diameter (Typ.)	24 1/2 in
Impeller Type	Backward Inclined Centrifugal
Impeller Material	Aluminum
Max Inlet Temp	180 °F
Bearing Type	Regreaseable Pillow Block
Drive Package Description	Drives By Others
Warranty Length	1 Year

Air & Sound Performance

Motor HP	Max BHP	Fan RPM	CFM @	0.000" SP	0.125" SP	0.250" SP	0.375" SP	0.500" SP	0.625" SP	0.750" SP	0.875" SP	1.000" SP	1.250" SP	1.500" SP
1/4	0.26	460	CFM	4223	3785	3188	2036	—	—	—	—	—	—	—
			Sones	6.7	6.6	5.7	4.2	—	—	—	—	—	—	—
1/3	0.35	505	CFM	4637	4242	3761	3060	—	—	—	—	—	—	—
			Sones	7.8	7.5	6.9	6.1	—	—	—	—	—	—	—
1/2	0.55	585	CFM	5371	5031	4666	4195	3562	2112	—	—	—	—	—
			Sones	10.3	9.7	9.1	8.8	8.2	7.2	—	—	—	—	—
3/4	0.79	660	CFM	6060	5757	5449	5094	4636	4073	3217	—	—	—	—
			Sones	13.1	12.4	11.8	11.3	11.0	10.6	10.4	—	—	—	—
1	1.06	730	CFM	6702	6428	6158	5861	5507	5077	4568	3920	—	—	—
			Sones	15.8	15.0	14.3	13.8	13.4	13.1	12.9	12.7	—	—	—
1 1/2	1.54	825	CFM	7575	7332	7092	6844	6574	6261	5901	5477	5002	—	—
			Sones	19.7	18.6	17.7	17.2	16.8	16.4	16.2	15.6	14.8	—	—
2	2.06	910	CFM	8355	8135	7916	7700	7467	7215	6933	6616	6240	5388	3707
			Sones	24.0	23.0	21.0	21.0	21.0	20.0	19.6	19.4	19.2	16.7	13.6
3	2.06	910	CFM	8355	8135	7916	7700	7467	7215	6933	6616	6240	5388	3707
			Sones	24.0	23.0	21.0	21.0	21.0	20.0	19.6	19.4	19.2	16.7	13.6

Performance certified is for installation type A: Free inlet, Free outlet. Power rating (BHP) does not include transmission losses. Performance ratings include the effects of a birdscreen in the airstream. The sound ratings shown are loudness values in fan sones at 5 ft. (1.5 m) in a hemispherical free field calculated per AMCA Standard 301. Values shown are for installation type A: Free inlet hemispherical sone levels.