Dayton

Stock No. 5EFH7

Job Name:
Mark:

Submitted By:
Date:11/29/2026

Power Roof Ventilators

Centrifugal Belt-Drive Downblast Exhaust Ventilator



Designed to meet the general clean air exhaust requirements for industrial and commercial buildings. Features a fully rolled windband bead for increased stability and easy transport. Fresh outside air is drawn in under the motor cover to maximize motor life.

- Aluminum backward inclined, nonoverloading centrifugal wheel design
- Maximum inlet air temperature: 180º F
- NEMA 1 junction box located in motor enclosure
- Optional NEMA 1 and 4 disconnects available
- Sealed pillow block bearings
- UL/cUL 705 Listed for Power Ventilators
- Air handling quality bearings meet minimum of L10-100,000 hours

AMCA Sound & Air

Dayton Electric Mfg. Co. certifies that the ventilators shown herein are licensed to bear the AMCA seal. The ratings shown are based on tests and procedures performed in accordance with AMCA Publication 211 and AMCA Publication 311 and comply with the requirements of the AMCA Certified Ratings Program.

UL/cUL 705

c UL us LISTED
E53236

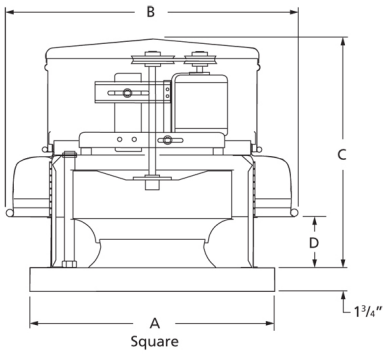

A	B	C	D
22 in	28 3/8 in	25 3/8 in	4 in

Performance Characteristics

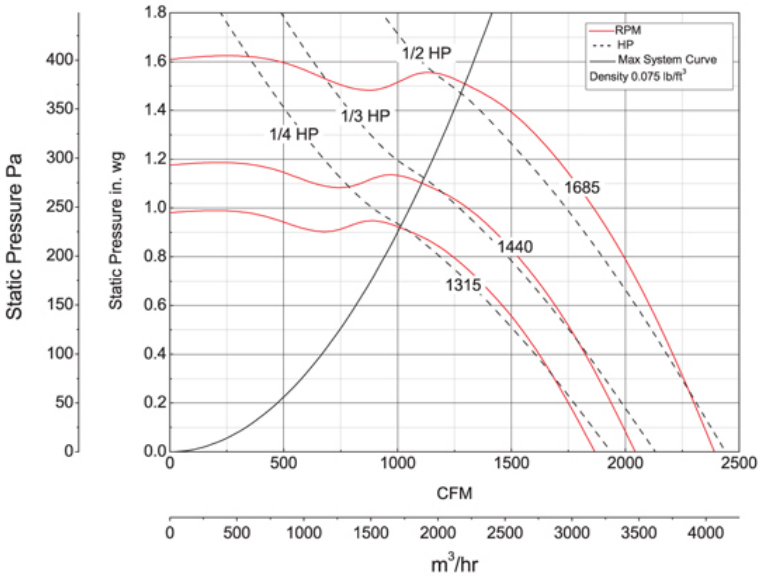

Construction Features

Impeller Diameter (Typ.)	13 3/4 in
Impeller Type	Backward Inclined Centrifugal
Impeller Material	Aluminum
Max Inlet Temp	180 °F
Bearing Type	Sealed Pillow Block
Drive Package Description	Drives By Others
Warranty Length	1 Year

Air & Sound Performance

Motor HP	Max BHP	Fan RPM	CFM @	0.000" SP	0.125" SP	0.250" SP	0.375" SP	0.500" SP	0.625" SP	0.750" SP	0.875" SP	1.000" SP	1.250" SP	1.500" SP
1/4	0.26	1315	CFM	1866	1794	1718	1637	1545	1435	1305	1116	—	—	—
			Sones	13.2	12.8	12.5	12.1	11.7	11.2	10.9	10.4	—	—	—
1/3	0.35	1440	CFM	2044	1978	1911	1838	1759	1674	1571	1453	1299	—	—
			Sones	15.0	15.0	15.1	15.1	14.5	13.9	13.4	13.0	12.5	—	—
1/2	0.56	1685	CFM	2391	2335	2279	2219	2158	2093	2020	1946	1857	1654	1312
			Sones	16.9	16.6	16.3	16.0	15.7	15.4	15.1	14.8	14.5	13.9	13.5

Performance certified is for installation type A: Free inlet, Free outlet. Power rating (BHP) does not include transmission losses. Performance ratings include the effects of a birdscreen in the airstream. The sound ratings shown are loudness values in fan sones at 5 ft. (1.5 m) in a hemispherical free field calculated per AMCA Standard 301. Values shown are for installation type A: Free inlet hemispherical sone levels.